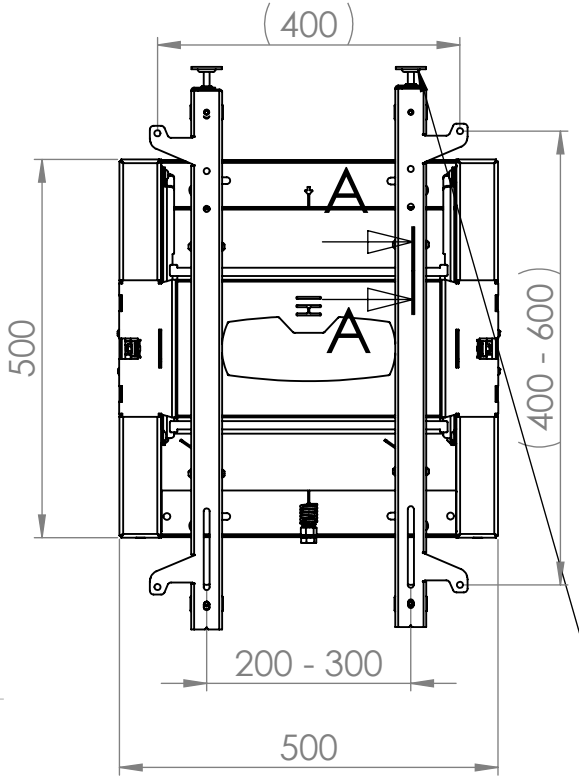

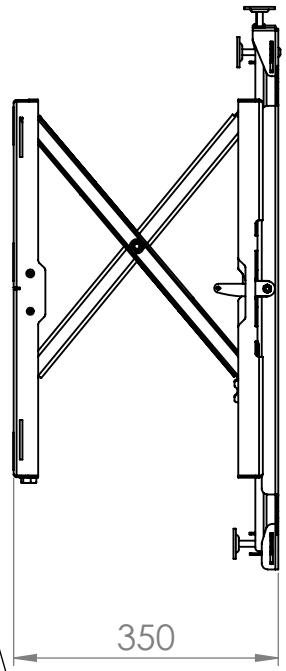

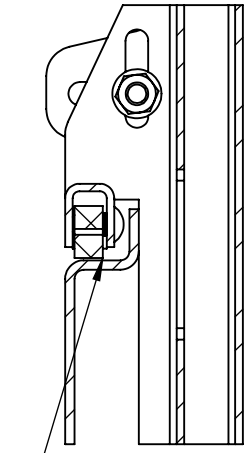

SECTION A-A
SCALE 1 : 2

Side to Side Roller Wheel

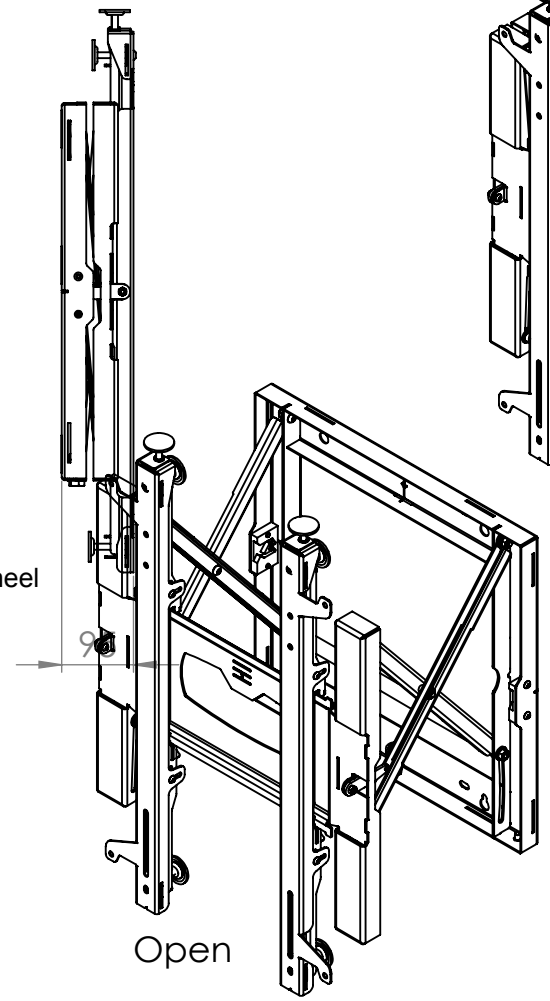

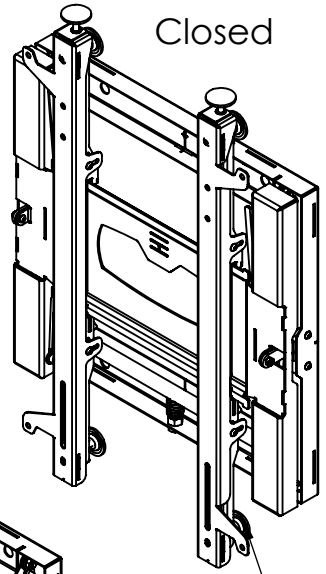

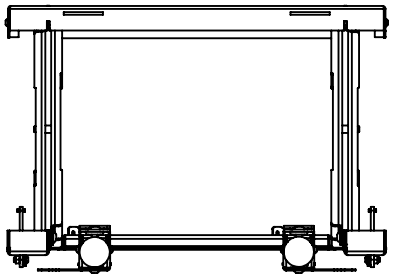

Depth Adjuster

Depth Adjuster

Description	Vwp2 - 400X600 - Vesa Pull Push Portrait Video Wall		
UNLESS OTHERWISE SPECIFIED: DIMENSIONS ARE IN MILLIMETERS SURFACE FINISH: Powder Coated	Mod Date 15/03/2016 Drawn Date: 10/01/2013	REVISION A-004	Bend & Machine Number M6 X 16 Pozi 4 off , M8 X 16 Pozi 4 off
DRAWN Dennis Neale	Material		
Unicol Engineering Green Road Oxford OX3 8EU	Gauge	DWG NO. VWP2	A4
Bend Tool	WEIGHT: 11.63 Kg	SCALE:1:10 DO NOT SCALE DRAWING	SHEET 1 OF 2

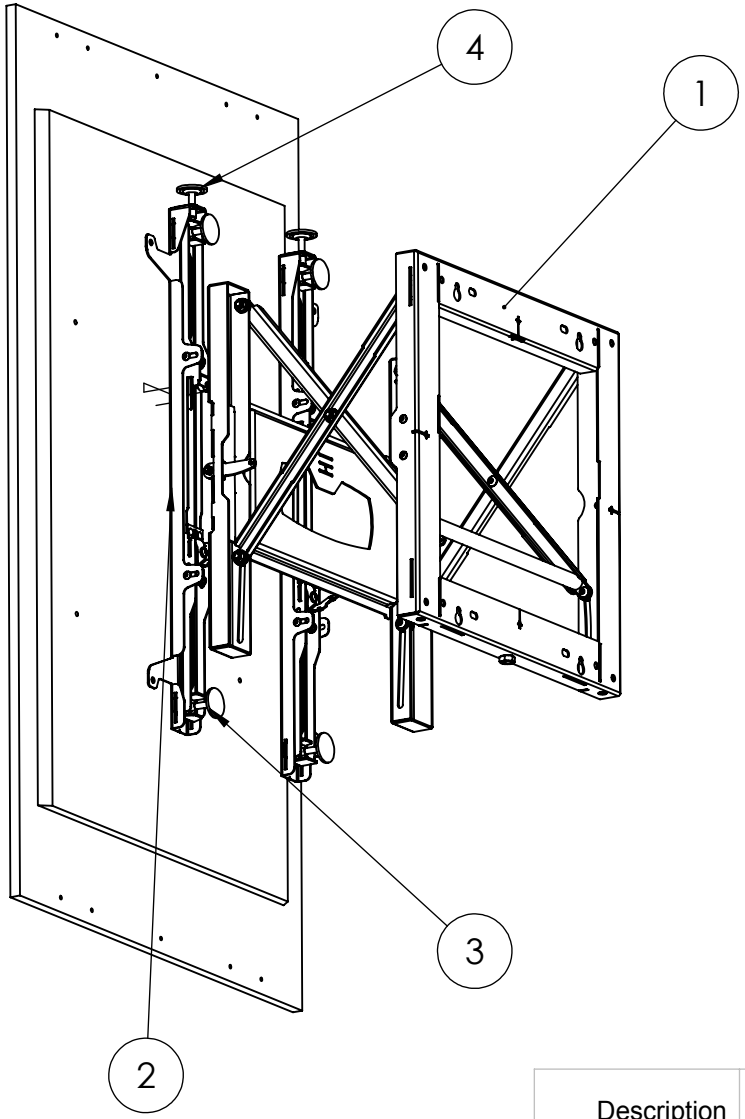

Installations

1. Fit to wall (1) or other vertical surface making certain that it can support at least 5 times the intended load.
2. Fit the VWP arms (2) to the screen using the appropriate fixings
3. Extend the VWP mount by pushing the front plate to release
4. Lift the screen with the arms attached onto the front plate making certain that you have the unit securely supported by the extending wall unit prior to release
5. Push the fitted screen back and forth a few times making certain that any fitted cables are not pinched and the unit works freely
6. Make certain that if the unit is being used inline with other or in a alcove it will have some degree of space for ventilation and avoid damage to bezel by adjusting the vertical lifters (4), internal/external adjusters (3)

Description	Vwp2 - 400X600 - Vesa Pull Push Portrait Video Wall			
UNLESS OTHERWISE SPECIFIED: DIMENSIONS ARE IN MILLIMETERS SURFACE FINISH: Powder Coated	Mod Date 15/03/2016 Drawn Date: 10/01/2013	REVISION A-004	Bend & Machine Number	
DRAWN Dennis Neale	Material			
Unicol Engineering Green Road Oxford OX3 8EU	Gauge		DWG NO. VWP2	A4
Bend V Tool	WEIGHT: 11.63 Kg		SCALE:1:10 DO NOT SCALE DRAWING	SHEET 2 OF 2